IDEM - LOCK FOR GBN-3 CONTACTLESS SWITCHES

210060
GBN-3 Gate Bolt Non Contact Left

- Fits magnetic switches and RFID
- Adapted to four padlocks
- Immediate unblocking from inside

Product description

The interlock for GBN-3 contactless switches can be installed, for example, in gates to prevent the machine from starting when the operator is in the middle. Operation can use up to 4 padlocks and prevent activation of the switch by moving the handle. Non-contact switches are mounted on an aluminum plate to ensure maximum range. The GBN-3 lock allows operators to immediately open the closed gate from the inside by pushing the gate. No tools or keys are needed to allow immediate evacuation.
The lock is intended for use with coded switches: SPC, SMC, SMC-H, LPC, LMC; magnetic SPR, SMR, SMR-H, LPR, LMR as well as RFID: SPF-RFID, LPF-RFID, LPZ-RFID.

Specifications
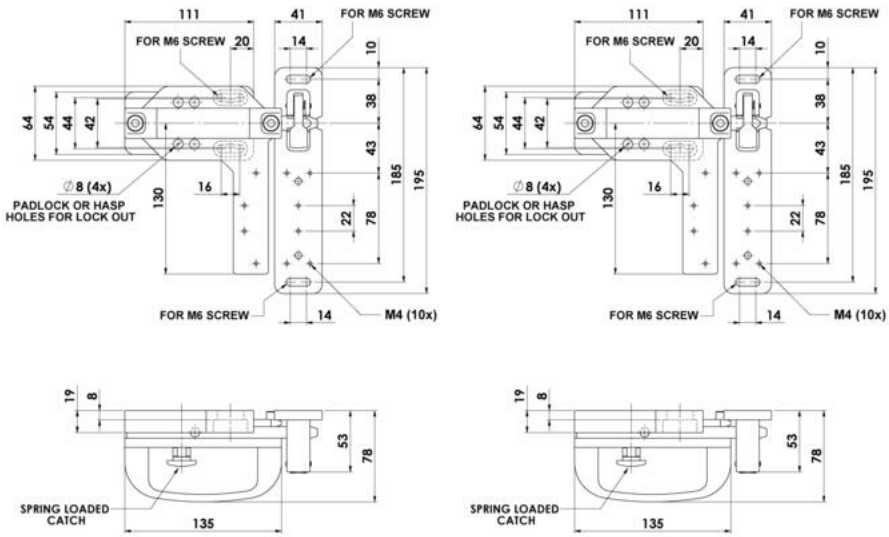
Mounting	4 x M6